survitec

DAVIT LAUNCHED LIFERAFT

Easy to launch and embark



Protect your passengers and crew in an evacuation situation. The davit launch system lowers the liferaft allowing your passengers to easily board from the deck. Easy to maintain and service, these compact liferafts are the first choice for many operators.

BENEFITS:

- ✓ Suitable for four up to 37 persons, with options to suit your vessel needs
- ✓ Easy to operate with minimal crew supervision
- ✓ Fully enclosed double-skinned, high visibility canopy complete with retro-reflective tape for improved visibility
- ✓ Easy access non-inflatable boarding ramp
- ✓ Manufactured using corrosion and abrasion-resistant polyurethane-coated fabric for longevity
- ✓ High volume water pockets to ensure maximum stability when inflating
- ✓ Available in different container options to suit your needs
- ✓ Extremely strong and safe when loaded



"A lightweight and durable liferaft"

TRUSTED TO
PROTECT LIVES

DAVIT LAUNCH LIFERAFT

TECHNICAL DATA

LIFERAFT	
Sizes Available	12, 16, 20, 25 and 37 person
Container Options	MK10 Cylindrical Container, MK14 Cylindrical Container, Flat Pack Container
Emergency Packs	Yes
Self Righting	No
Deployment	Davit Launch System

APPROVALS & ACCREDITATIONS

✓ SOLAS, MED and other national maritime flags

Our liferafts are available in a range of trusted brands:

RFD by survitec

ZODIAC by survitec

MK10 CYLINDRICAL CONTAINER

ROUND CONTAINER - SOLAS A PACK

Capacity	Length (mm)	Height (mm)	Net Weight (KG)
12	1390	535	114
16	1540	535	139
20	1635	582	160
25	1540	530	183

ROUND CONTAINER - SOLAS B PACK

Capacity	Length (mm)	Height (mm)	Net Weight (KG)
12	1260	485	92
16	1390	535	107
20	1540	530	120
25	1540	530	133

ROUND N CONTAINER - SOLAS A PACK

Capacity	Length (mm)	Width (mm)	Height (mm)	Net Weight (KG)
37	1500	950	945	290

ROUND N CONTAINER - SOLAS B PACK

Capacity	Length (mm)	Width (mm)	Height (mm)	Net Weight (KG)
37	1450	800	740	200

MK14 CYLINDRICAL CONTAINER

ROUND CONTAINER - SOLAS A PACK

Capacity	Length (mm)	Height (mm)	Net Weight (KG)
12	1156	584	113
16	1156	584	141
16	1308	685	141
20	1308	685	163
25	1308	685	185

ROUND CONTAINER - SOLAS B PACK

Capacity	Length (mm)	Height (mm)	Net Weight (KG)
12	1156	584	92
16	1156	584	106
20	1308	685	123
25	1308	685	135

DAVIT LAUNCH LIFERAFT

FLAT PACK CONTAINER

SOLAS A PACK

Capacity	Length (mm)	Width (mm)	Height (mm)	Net Weight (KG)
20	1525	820	505	160
25	1525	820	505	183

SOLAS B PACK

Capacity	Length (mm)	Width (mm)	Height (mm)	NetWeight (KG)
20	1525	820	505	153
25	1525	820	505	153

DAVIT LAUNCH LIFERAFT HEIGHTS

Capacity	A (mm)	B (mm)	C (mm)	D (mm)	E (mm)
12	1600	1000	2860	1891	1300
16	1700	1000	3270	2065	1420
20	1800	1000	4070	2065	1400
25	1800	1000	4070	2270	1540

STACKABLE CONTAINER SINGLE STORAGE - SOLAS A PACK

Capacity	Length (mm)	Width (mm)	Height (mm)	Net Weight (KG)
25	1450	820	915	250
37	1500	955	1115	350

SOLAS B PACK

Capacity	Length (mm)	Width (mm)	Height (mm)	Net Weight (KG)
25	-	-	-	-
37	1450	820	915	240

STACKABLE CONTAINER DOUBLE STORAGE - SOLAS A PACK

Capacity	Length (mm)	Width (mm)	Height (mm)	Net Weight (KG)
25	1450	820	1650	450
37	1500	955	2060	660

SOLAS B PACK

Capacity	Length (mm)	Width (mm)	Height (mm)	Net Weight (KG)
25	-	-	-	-
37	1500	955	2060	440

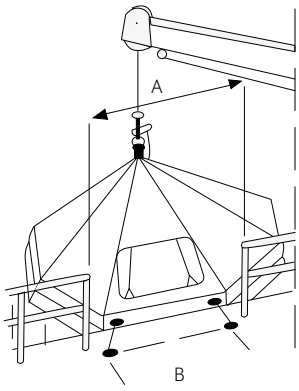

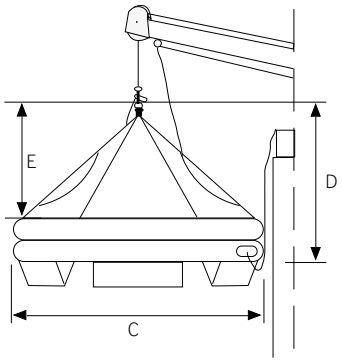

survitec
SURVIVAL TECHNOLOGY

GET IN TOUCH
Email info@survitecgroup.com
www.survitecgroup.com

© Copyright Survitec Group 2025